DUAL FUEL BURNER _ GAS/LIGHT OIL
SERIE K

Progressive and modulating from 3488 up to 7558

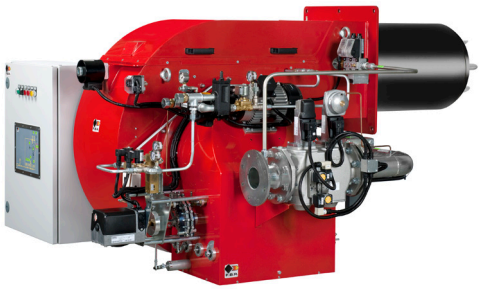

Dual fuel burners for gas and light oil at 2 stages progressive (hi-low flame) or PID fully modulating if optional modulation kit (digital type) and feeder (of temperature or pressure) are added.
Fan at high pressurization, high efficiency combustion head with adjustment and high flame stability. Available versions for natural gas or LPG (to be specified at the order).
Gas train includes working valve, safety valve, minimum gas pressure switch, gas pressure filter-stabilizer and is supplied already assembled, connected and tested.
The adoption of strong metal components makes the burner durable also in heavy duty conditions.
Burners are supplied with nozzle, fuel switch, gasket for installation on boiler, flexible hoses, line filter.
Available also versions with electronic camme.

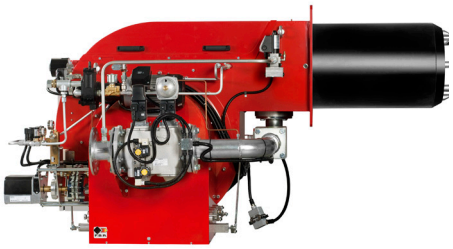

TECHNICAL DATA

MODEL		K 650/M MEC
Thermal power min-max*	Mcal/h	1000/3000-6500
	kW	1162/3488-7558
Flow-rate G20 (NATURAL GAS) min-max*	Nm ³/h	117/351-760
Flow-rate G31 (LPG) min-max*	Nm ³/h	45/136-294
Fuel		NATURAL GAS (second family) - LPG (third family)
Combustible category		|2R'|2H'|2L'|2E'|2E+'|2Er'|2ELL'|2E(R)B|38/P'|3+'|3P'|38'|3R
Intermittent operation (min. 1 stop every 24 hours) at 2 stages progressive or modulating		
Allowed environment conditions on running/stock		-15..+40°C/-20...+70°C, rel. humidity max 80%
Max temperature combustion air	°C	60
Min. pressure gas train DN65-FS65 NATURAL GAS/LPG*	mbar	190/86
Min. pressure gas train DN80-FS80 NATURAL GAS/LPG**	mbar	130/52
Min. pressure gas train DN100-F100 NATURAL GAS/LPG**	mbar	120/36.3
Min. pressure gas train DN125-F125 NATURAL GAS/LPG**	mbar	92/31.1
Max pressure at the entry of the valves (Pe.max)	mbar	500
LIGHT-OIL flow-rate min-max*	kg/h	102/306-663
Fuel		LIGHT-OIL 1.5° E a 20°C = 6.2 cSt = 35 sec Redwood N°1
Nominal electric power	kW	21
Motor fan	kW	18.5
Motor pump	kW	2.2
Power supply		3~400V,1/N~230V-50Hz
Degree of electric protection		IP44
Noisiness *** min-max	dB(A)	89
Weight	kg	655

20121107

* Reference conditions: Room temperature 20°C - Athmospheric pressure 1013 mbars - Altitude 0n (sea level)
** Minimal feeding-gas pressure to the gas train to get the maximum power of the burner, considering counter-pressure in combustion chamber of value 0 (zero)
*** Measured sonorous pressure in the combustion laboratory, with functional burner on beta boiler in a distance of 1 m.

DUAL FUEL BURNER _ GAS/LIGHT OIL
SERIE K

Progressive and modulating from 3488 up to 7558

FIRING RATES: Thermal power - Pressure in combustion chamber

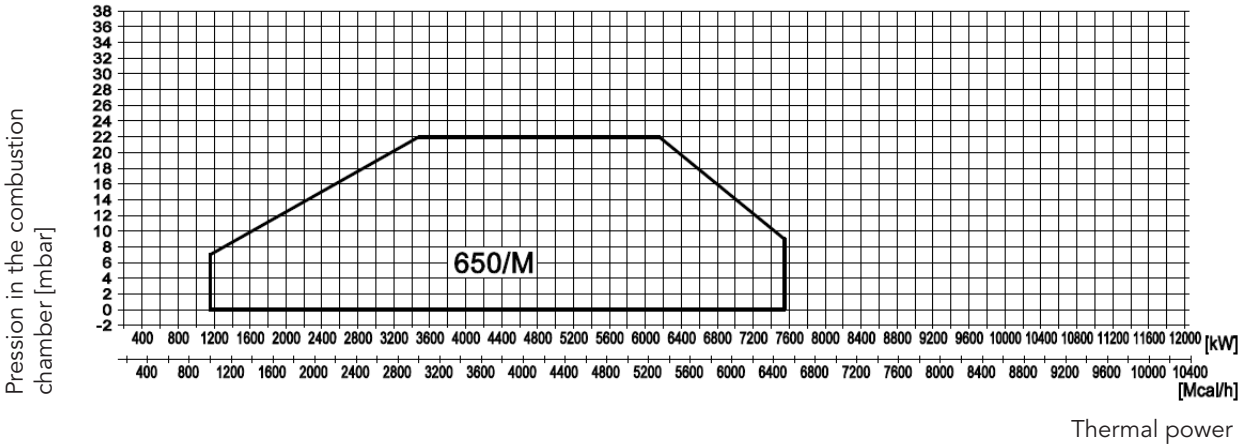

DIMENSIONS (mm)

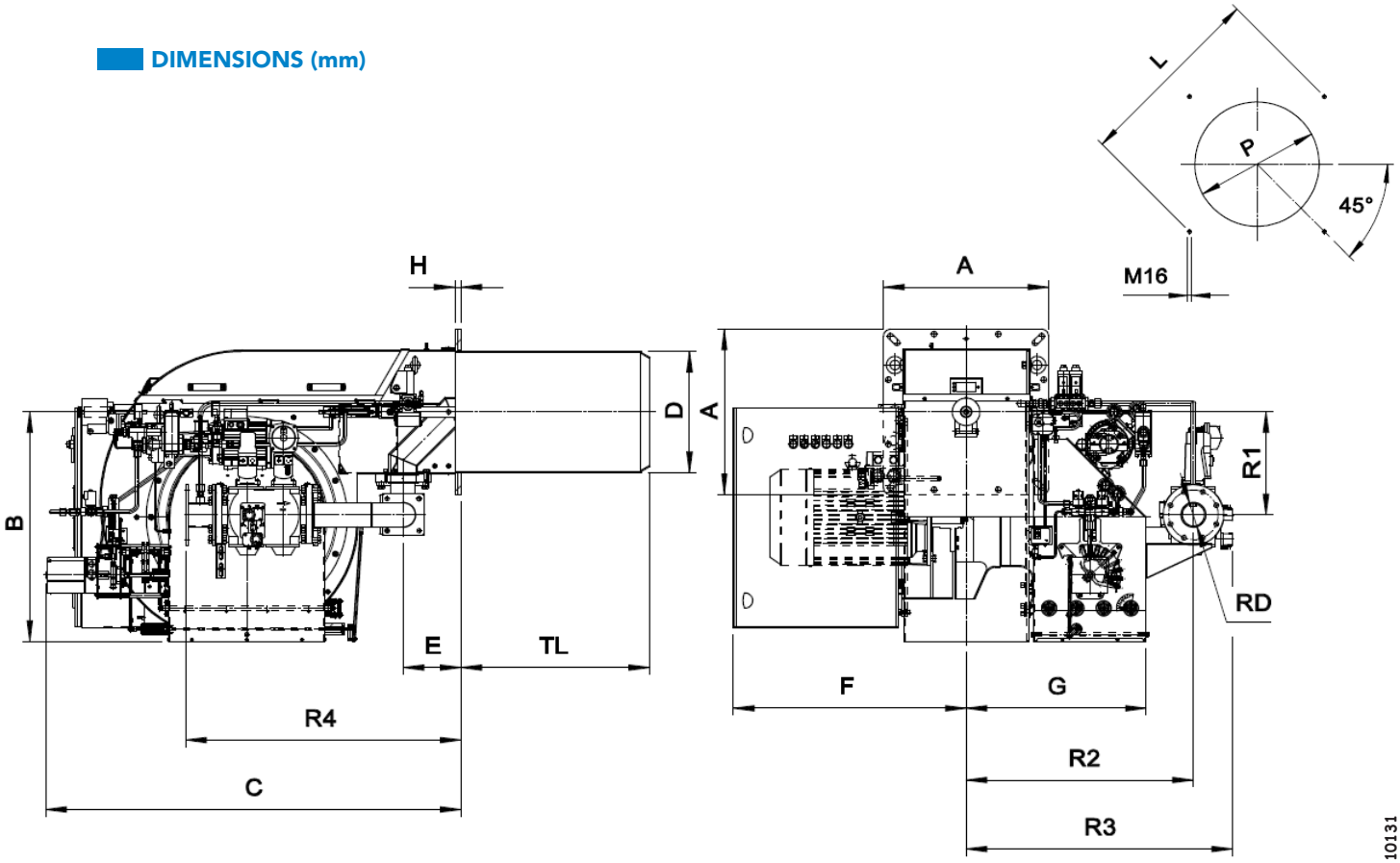

20110131

MODEL	A	B	C	D	E	F	G	H	TL	L min*	L max	P min	P max	R1	R2	R3	R4	RD	Gas train weight
K 650/M MEC DN65	600	832	1508	448	210	845	654	22	721	707	778	460	540	373	825	957	960	DN65	22 kg
K 650/M MEC DN80	600	832	1508	448	210	845	654	22	721	707	778	460	540	373	825	957	960	DN80	24 kg
K 650/M MEC DN100	600	832	1508	448	210	845	654	22	721	707	778	460	540	373	825	968	1000	DN100	27 kg
K 650/M MEC DN125	600	832	1508	448	210	845	654	22	721	707	778	460	540	373	825	982	1050	DN125	32 kg