# GAS X0-X1-X2-X3-X4-X5CE

Gas burners one stage with: die-cast aluminum body, fan at high pressurisation, combustion head with adjustment at high efficiency and high flame stability and protection cover with noise reduction plate.

Compact overall dimensions and disposition rationalized of the components with accessibility facilitated for the operations of setting and maintenance.

Available in the versions METHANE (natural gas) or G.P.L. (to specify at the order) on demand specific versions for town gas, coal gas or biogas.

Gas train completely assembled, electrically linked and tested; complete of working valve with flow adjustment, safety valve, minimum gas pressure switch and stabiliser filter of gas pressure.

Versions F with cover of protection in steel and specific features for the application on industrial ovens and bakery ovens.

Complete of connector plug / socket 7 poles, flange and gasket for installation on generator.

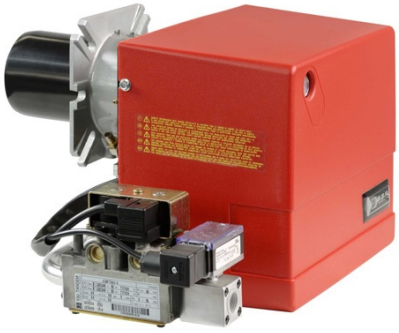

**Fig. 1** GAS X0CE



**Fig. 2** GAS X2CE

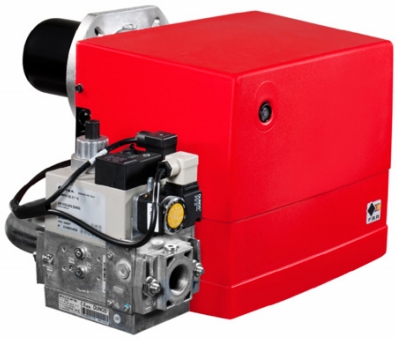

**Fig. 3** GAS X3CE

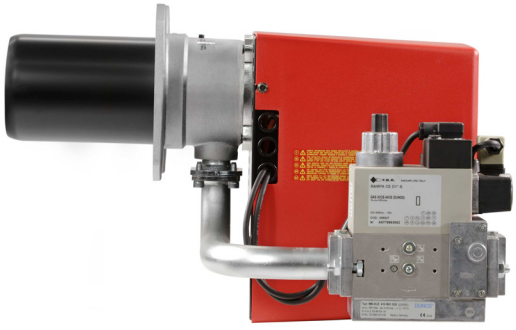

**Fig. 4** GAS X4CE



**Fig. 5** GAS X5CE

## TECHNICAL DATA AND OPERATING RANGE DIAGRAM

| MODEL | | GAS X0CE | GAS X1CE | GAS X2CE | GAS X3CE | GAS X4CE | GAS X5CE |
|---|---|---|---|---|---|---|---|
| Thermal power min. - max. * | [Mcal/h] | 10-29.5 | 20-50 | 35-80 | 60-150 | 100-200 | 130-300 |
| Thermal power min. - max. * | [kW] | 11.6-34.3 | 23.2-58.1 | 40.7-93 | 69.8-174 | 116-232 | 151-349 |
| Gas flow G20 (NATURAL GAS) min. - max. * | [Nm³/h] | 1.2-3.4 | 2.3-5.8 | 4.1-9.4 | 7-17.5 | 11.7-23.4 | 15.2-35.1 |
| Gas flow G31 (L.P.G.) min. - max. * | [Nm³/h] | 0.5-1.3 | 0.9-2.2 | 1.6-3.6 | 2.7-6.8 | 4.5-9 | 5.8-13.5 |
| Fuel: NATURAL GAS (second family) - L.P.G. (third family) | | | | | | | |
| Fuel category: | | I2R,I2H,I2L,I2E,I2E+,I2Er,I2ELL,I2E(R)B/I3B/P,I3+,I3P,I3B,I3R | | | | | |
| Intermitted working operation (min. 1 stop every 24 hours) one stage | | | | | | | |
| Environmental conditions operation / storage: | | -15...+40°C / -20...+70°C, rel. humidity max. 80% | | | | | |
| Max. temperature combustion air | [°C] | 60 | 60 | 60 | 60 | 60 | 60 |
| Min. pressure gas train D1/2"-S NATURAL GAS/L.P.G. ** | [mbar] | 7/18 | 14/31 | - | - | - | - |
| Min. pressure gas train D3/4"-S NATURAL GAS/L.P.G. ** | [mbar] | - | - | 18/24 | - | - | - |
| Min. pressure gas train D1"-S NATURAL GAS/L.P.G. ** | [mbar] | - | - | - | 14/31 | 14/21 | 27/33 |
| Min. pressure gas train D1"1/4-S NATURAL GAS/L.P.G. ** | [mbar] | - | - | - | - | - | 16/25 |
| Max. pressure at the entry of valves (Pe. max) | [mbar] | 60 | 60 | 360 | 360 | 360 | 360 |
| Nominal electric power | [W] | 80 | 110 | 130 | 200 | 226 | 540 |
| Fan motor | [W] | 50 | 75 | 75 | 110 | 200 | 370 |
| Nominal motor current absorption | [A] | 0.5 | 0.6 | 0.6 | 0.9 | 1.1 | 2.4 |
| Power supply: | | 1/N~230V-50Hz | | | | | |
| Electric protection degree: | | IP 40 | IP 40 | IP 40 | IP 40 | IP 40 | IP 40 |
| Noisiness *** min. - max. | [dB(A)] | 52-55 | 59-60 | 60-61 | 64-66 | 64-66 | 67-71 |
| Burner weight **** | [kg] | 8 | 10 | 10 | 13 | 15 | 24 |

* Reference conditions: Environment temperature 20°C - Barometric pressure 1013 mbars - Altitude 0 metre (sea level).
** Minimal feeding-gas pressure to the gas train to get the maximum power of the burner, considering counter-pressure in combustion chamber of value 0 (zero).
*** Measured sonorous pressure in the laboratory combustion, with functional burner on beta boiler to 1 metre of distance (UNI EN ISO 3746 law).
**** For burners: GAS X0CE - GAS X1CE - GAS X2CE - GAS X3CE - GAS X4CE with cover in steel (F) add 3 kg to the weight.
**** For burner GAS X5CE with cover in steel (F) add 5 kg to the weight.

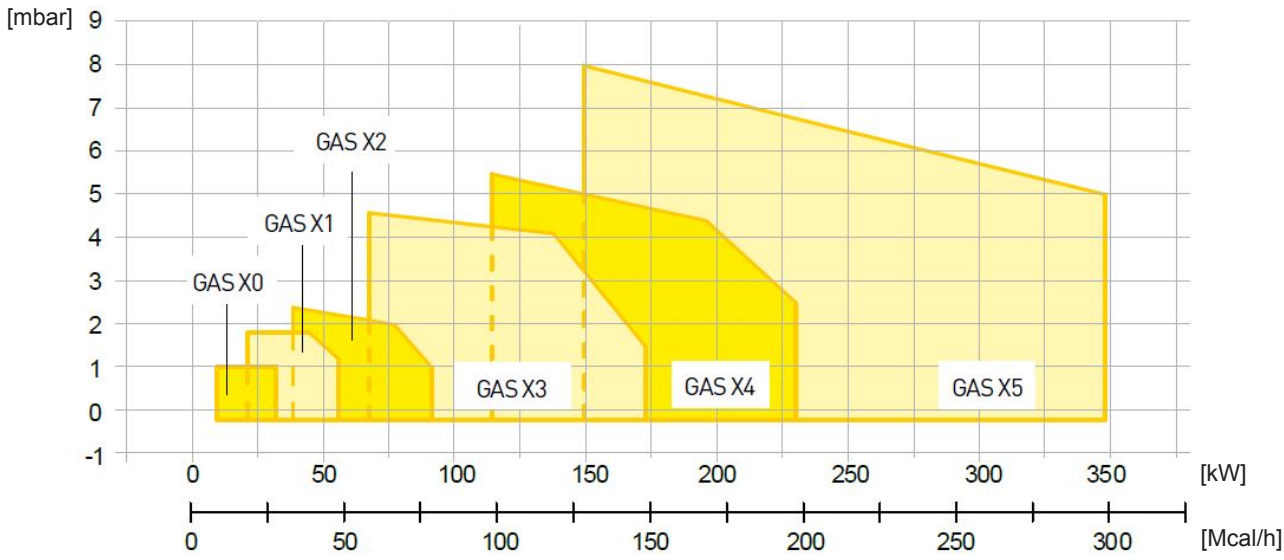


**Fig. 6** X = Thermal power Y = Pression in the combustion chamber

The firing rates has been obtained based on test boilers in accordance with EN267 standards and are indicative of matching the burner to the boiler. For the correct operation of the burner, combustion chamber dimensions must be in accordance with current regulation. In case of non-compliance, contact the manufacturer.

## DIMENSIONS [mm]

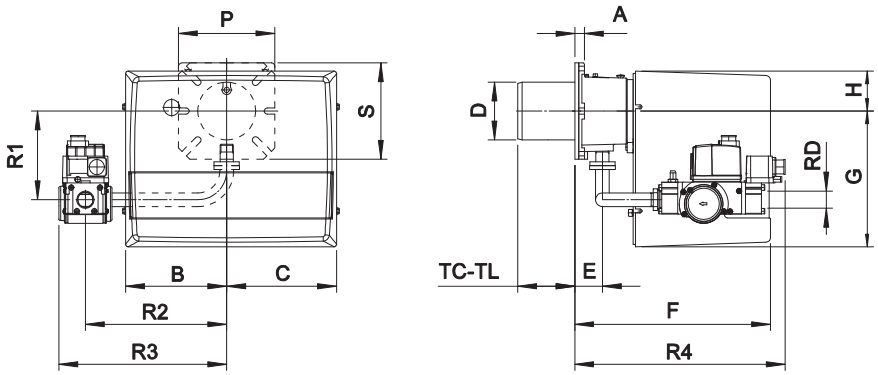


**Fig. 7** Dimensions GAS X0CE - GAS X1CE - GAS X2CE - GAS X3CE - GAS X4CE

| MODEL | A | B | C | D | E | F | G | H | P | S | TC | TL * | R1 | R2 | R3 | R4 | RD | Gas train weight |
|---|---|---|---|---|---|---|---|---|---|---|---|---|---|---|---|---|---|---|
| GAS X0CE D1/2"-S | 15 | 140 | 140 | 90 | 43 | 265 | 169 | 72 | 150 | 150 | 90 | 150 | 132 | 200 | 254 | 240 | Rp 1/2 | 2 kg |
| GAS X1CE D1/2"-S | 15 | 162 | 175 | 90 | 43 | 305 | 210 | 65 | 150 | 150 | 90 | 150 | 132 | 200 | 254 | 240 | Rp 1/2 | 2 kg |
| GAS X2CE D3/4"-S | 15 | 162 | 175 | 90 | 43 | 305 | 210 | 65 | 150 | 150 | 90 | 150 | 138 | 220 | 262 | 328 | Rp 3/4 | 3 kg |
| GAS X3CE D1"-S | 16 | 185 | 195 | 108 | 54 | 340 | 248 | 70 | 200 | 160 | 130 | 250 | 168 | 280 | 337 | 361 | Rp 1 | 8 kg |
| GAS X4CE D1"-S | 20 | 185 | 195 | 125 | 78 | 368 | 248 | 70 | 200 | 200 | 160 | 280 | 173 | 280 | 337 | 385 | Rp 1 | 8 kg |

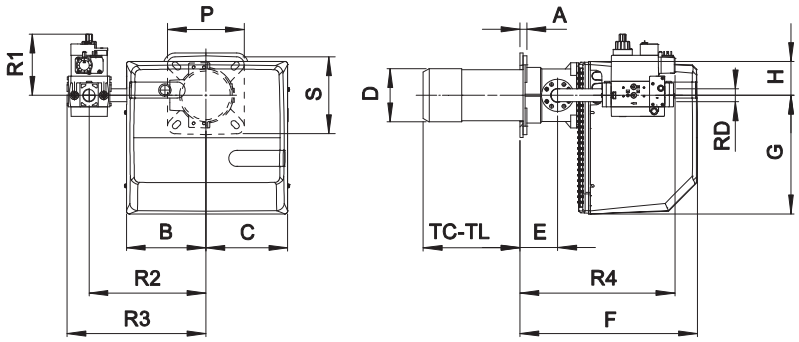


**Fig. 8** Dimensions GAS X5CE

| MODEL | A | B | C | D | E | F | G | H | P | S | TC | TL * | R1 | R2 | R3 | R4 | RD | Gas train weight |
|---|---|---|---|---|---|---|---|---|---|---|---|---|---|---|---|---|---|---|
| GAS X5CE D1"-S | 18 | 207 | 213 | 138 | 98 | 462 | 310 | 90 | 200 | 200 | 250 | 335 | 160 | 305 | 362 | 403 | Rp 1 | 8 kg |
| GAS X5CE CT-D1"-S | 18 | 207 | 213 | 138 | 98 | 462 | 310 | 90 | 200 | 200 | 250 | 335 | 160 | 305 | 480 | 403 | Rp 1 | 9 kg |
| GAS X5CE D1"1/4-S | 18 | 207 | 213 | 138 | 98 | 462 | 310 | 90 | 200 | 200 | 250 | 335 | 160 | 305 | 362 | 450 | Rp 1 1/4 | 8 kg |
| GAS X5CE CT-D1"1/4-S | 18 | 207 | 213 | 138 | 98 | 462 | 310 | 90 | 200 | 200 | 250 | 335 | 160 | 305 | 480 | 450 | Rp 1 1/4 | 9 kg |

* For different flame lengths, please contact our Technical-Sales Department.

## BOILER PLATE

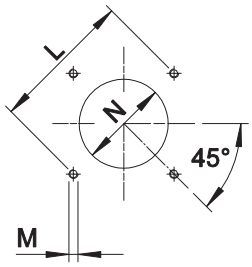


** Suggested dimension of connection between burner and generator.

**Fig. 9** Boiler plate

| MODEL | | L min | L * * | L max | M | N min | N * * | N max |
|---|---|---|---|---|---|---|---|---|
| GAS X0CE | mm | 130 | 150 | 170 | M8 | 100 | 110 | 130 |
| GAS X1CE | mm | 130 | 150 | 170 | M8 | 100 | 110 | 130 |
| GAS X2CE | mm | 130 | 150 | 170 | M8 | 100 | 110 | 130 |
| GAS X3CE | mm | 150 | 170 | 170 | M8 | 120 | 130 | 140 |
| GAS X4CE | mm | 170 | 205 | 226 | M10 | 130 | 140 | 160 |
| GAS X5CE | mm | 205 | 226 | 226 | M10 | 150 | 150 | 180 |

## PRODUCT SPECIFICATION

### SHORT DESCRIPTION

Gas burners on stage.

### DETAILED SPECIFICATION

Gas burner one stage composed by:

- Die-cast aluminum body;
- Fan at high pressurisation;
- Combustion head with adjustment at high performance and elevated flame stability equipped with inox steel blast tube and steel flame disc;
- Protection cover with noise reduction plate;
- Flange and insulating gasket for fixing at boiler;
- Single-phase power supply;
- Safety air pressure switch to stop the burner in case of failed or anomalous fan operation;
- Gas train with safety valve and adjustment valve;
- Ionisation probe for flame detection;
- IP 40 electric protection level.

### CONFORMING TO:

- CE rules;
- 2004/108/CE Directive E.M.C.;
- 2006/95/CE Directive L.V.;
- 2006/42/CE Directive M.D.;
- 97/23/CE Directive P.E.D.;
- 2009/142/CE Directive GAS;
- Reference rules: EN676 (gas) - EN746-2 (industrial thermoprocessing equipment).

### STANDARD EQUIPMENT

- Isomart gasket;
- Flange with insulating gasket;
- Burner nameplate;
- Warranty;
- Instruction handbook for installation, use and maintenance.

### OPTIONAL

- Antivibration couplings;
- Handle gas taps.

The illustrations and data here shown are indicative. F.B.R. Bruciatori S.r.l. reserves the right to bring, without any obligation of warning, any changes that would be appropriate to the continuing development of their products.